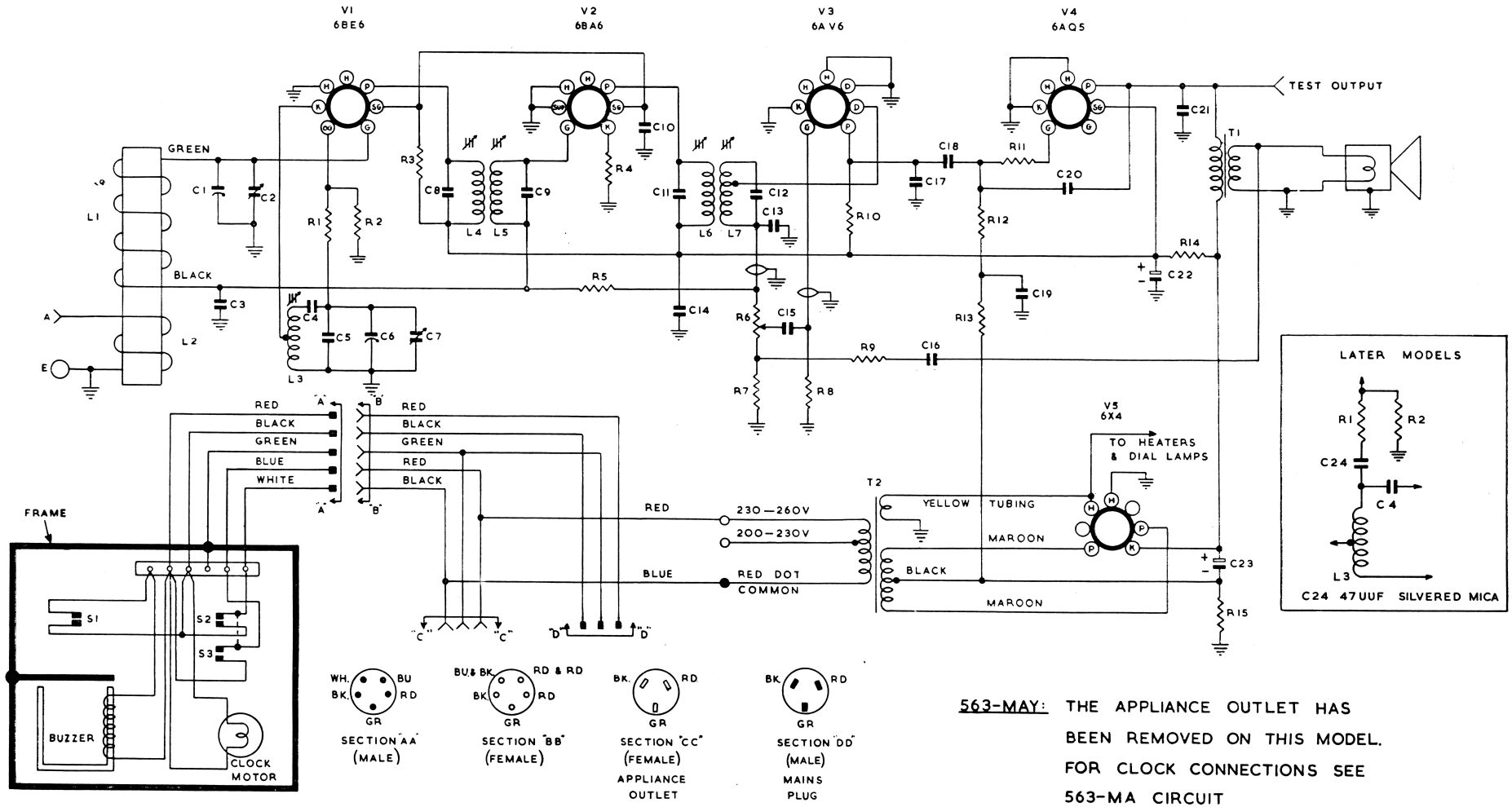

563-MAY: THE APPLIANCE OUTLET HAS BEEN REMOVED ON THIS MODEL. FOR CLOCK CONNECTIONS SEE 563-MA CIRCUIT