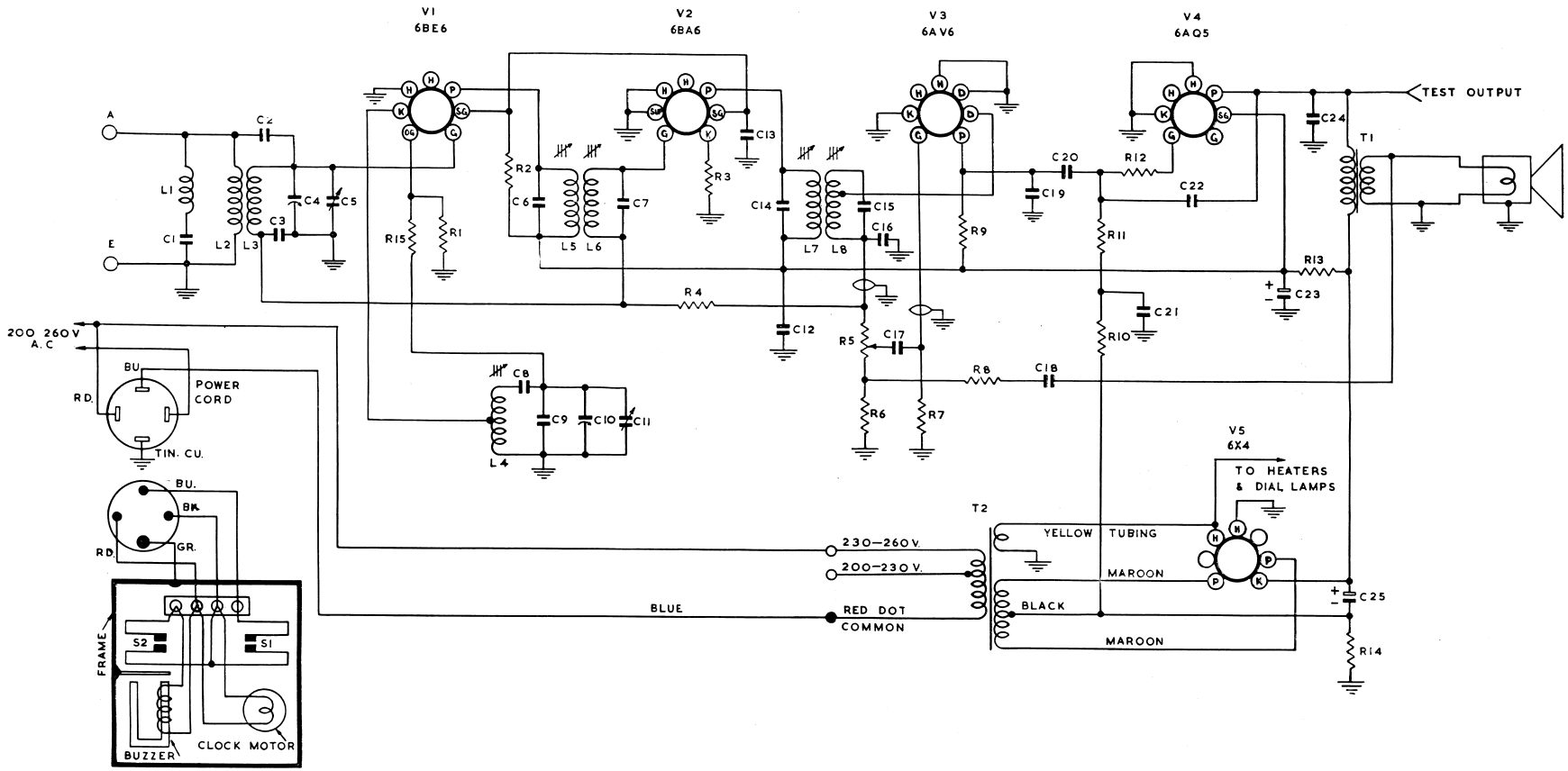
V1
6BE6
V2
6BA6
V3
6AV6
V4
6AQ5
V5
6X4
TEST OUTPUT
A
E
C1
C2
C3
C4
C5
C6
C7
C8
C9
C10
C11
C12
C13
C14
C15
C16
C17
C18
C19
C20
C21
C22
C23
C24
C25
L1
L2
L3
L4
L5
L6
L7
L8
R1
R2
R3
R4
R5
R6
R7
R8
R9
R10
R11
R12
R13
R14
R15
T1
T2
200 260V
A.C
BU.
RD.
POWER
CORD
TIN. CU.
BU.
BK.
RD.
GR.
FRAME
S2
S1
BUZZER
CLOCK MOTOR
230–260V.
200–230V.
BLUE
RED DOT
COMMON
YELLOW
TUBING
MAROON
BLACK
MAROON
TO HEATERS
& DIAL LAMPS